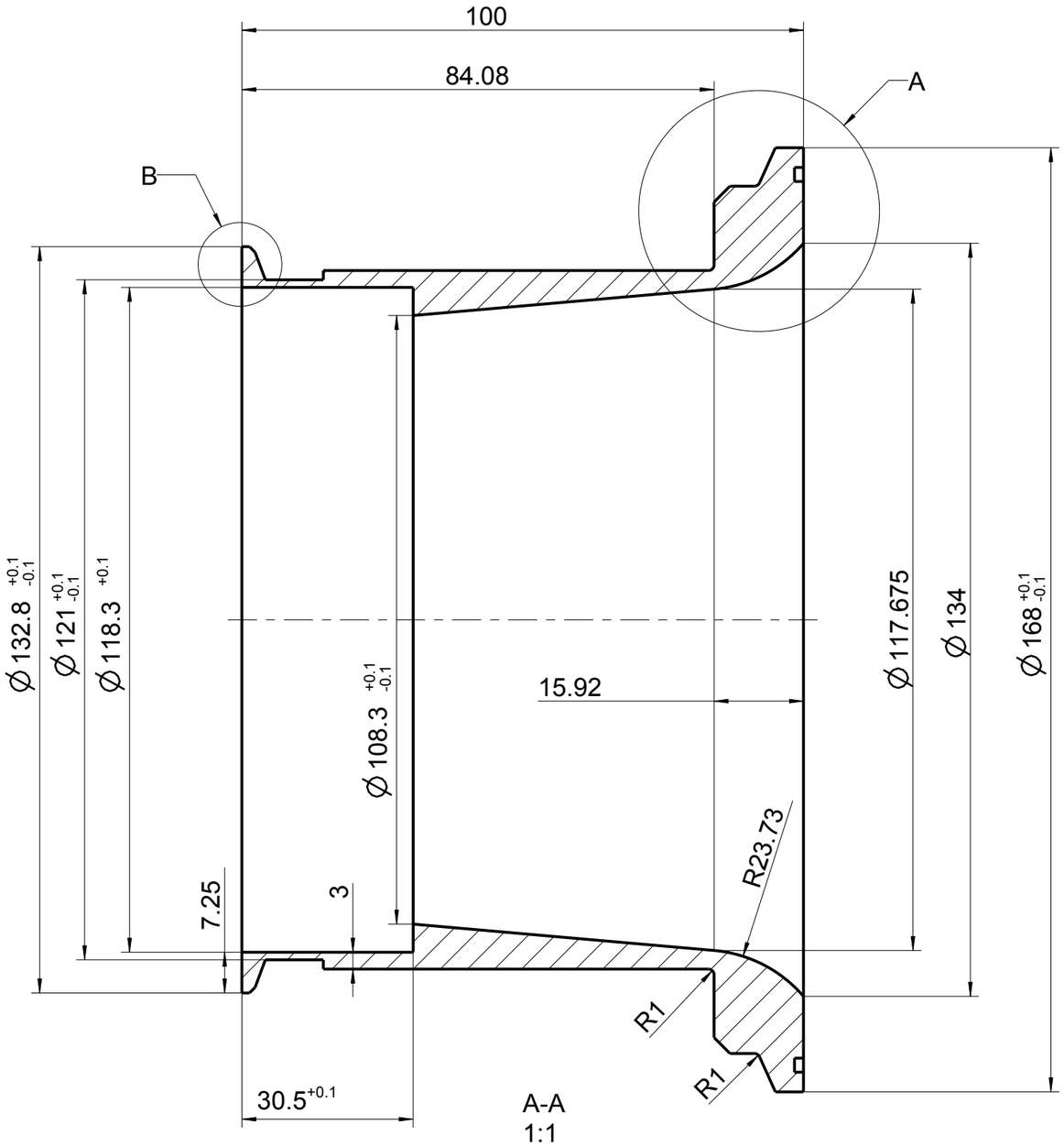

A-A
1:1

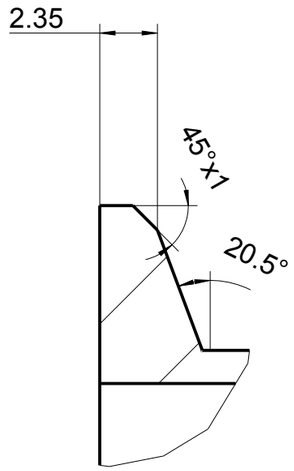

B
4:1

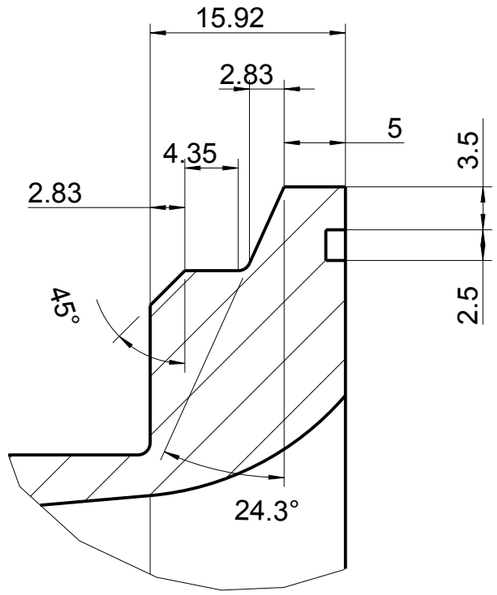

A
2:1

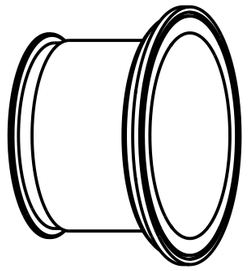

1:4

Document version	Previous version	Changed items	Change description (including number)
	-	-	ECM -

Die in diesem Dokument enthaltene Information ist lediglich eine technische Beschreibung des Produktes.
Sie stellt keine Beschaffenheits- oder Haltbarkeitsgarantie dar.
The information contained in this document is merely a technical description of the product.
This information is not meant or intended to be a special guarantee for a particular quality or a particular durability.

Surface	OL	/		-
Material	V2A			
Weight	calculated	g ± -%	weighed	g ± -%

Dimensions in millimetres	3D-Model	FLANSCH_NEUE_FB. . .PART	Scale
	Drawing	FLANSCH_NEUE_FB. .	7:20

For internal use only		Date	Department
Designed by	Weininger Holger		P S&A SM MAF RD
Released by	-	-	-

Designation	-	-
Document key		Pages 1 of 1

Copyright (C) Continental AG 2007

CAD-System: -